NON USE AND STORAGE PROCEEDURE

It is recommended to drain out all fuel from the tank and carburetor. Inflate the tires to the working pressure and put the minibike on the stand. During a *long storage period, unbolt the spark plug and insert a couple of drops of the motor oil into the cylinder. Pull the starting rope a couple of times so a film of oil covers and evenly coats the cylinder walls and piston rings.
* Long period is 90 days and longer.

It is a great honor for us, that you have chosen our product. We believe that the MINIBIKE will work for you without problems and will bring you much pleasure and fun.

The producer of the MINIBIKE is China Company.

Manufacturing Number CZ .....

Signature of the technical control: .....

This manual served also as a guarantee list. Please, after receiving the product check the manufacturing number and the date of sale. In the case of a claim it is necessary to submit this guarantee list.

Date, stamp and signature of the dealer:

MANUAL INSTRUCTION

Water cooled engine

Pocket bike

MINIBIKE

SERVICE MANUAL FOR USE AND MAINTENANCE AND SPARE PARTS LIST

For your own safety and the safety of others Follow these recommendations in order to use your MINIBIKE safely and correctly. Read the instructions CAREFULLY, failure to do so may place yourself and others in extreme and or ultimate DANGER. If you do not understand the instructions and Data then, you are not to attempt to operate this Minibike under any circumstances. It may be used for show purposes only!

CONTENTS

INTRODUCTION

The Minibike is designed and built for use on a paved closed circuit track. The track should be clean and without obstacles of any kind. Qualified adults and younger persons can drive the minibike. Children can drive the minibike only under the supervision of a responsible adult person. The minibike is constructed especially for racing competitions on special racing tracks.

The minibike uses a single-cylinder two-stroke, Gasoline combustion engine, and has an air filter and exhaust silencer. Transfer of power to the rear wheel is through a drive chain. The the overall drive ratio to the rear wheel can be changed by the replacement of chain sprockets. The front and rear wheel is equipped with disk brakes. The rear brake is controlled with the left lever and the front brake is controlled with the right lever on the handlebars.

BASIC TECHNICAL DATA

ENGINE:		TWO-STROKE
	NUMBER OF CYLINDERS	1
	CYLINDER CAPACITY	39,8 cc
	ENGINE COOLING SYSTEM	LIQUID COOLED
	POWER OUTPUT	4,5 kW at 12 300 rpm
	TORQUE	4 Nm at 12 000 rpm
	CARBURETOR	PHVA 17,5 DELL' ORTO
	FUEL ADMISION	REED VALVE DIRECT TO CRANKCASE
	IGNITION	CONTACT-LESS
	SPARK PLUG	NGK B9ES
	STARTING	HAND PULL TYPE, MANUAL
	CLUTCH	CENTRIFUGAL AUTOMATIC
FRAME:	ENHANCED TRELLIS	SUPPORTING STRUCTURES MADE OF LIGHT ALLOYS
BRAKES:	FRONT WHEEL	DISC BRAKE – DISC DIAMETER 162mm (6,3")
	REAR WHEEL	DISC BRAKE-DISC DIAMETER 119 mm (4,7")
WHEELS:	FRONT	OF LIGHT ALLOY 2,1"x 6,5"- 99
	REAR	OF LIGHT ALLOY 2,1"x 6,5"- 130
TIRE:	FRONT	SIZE 90/65 - 6,5"
	REAR	110/50 - 6,5", 90/65 - 6,5"
FUEL:		MIXTURE OF PETROL 92 OR HIGHER OCTANE +2 STROKE SYNTHETIC OIL
	MIXING RATIO (after break in period)	50: 1
	TANK CAPACITY	1,7 Litre (0,44 US gal.)

UNLOADED WEIGHT:	25 kg (55 lb.)
CARRYING CAPACITY:	110 kg (242 lb.)
BASIC DIMENSIONS:	
LENGTH	1 100 mm (41")
WIDTH	560 mm (22 ")
HEIGHT	550 mm (21,6")

UNPACKING AND SETTING UP BEFORE RIDING

The minibike is delivered in a cardboard carton and packed with folded handlebars and brake levers. After unpacking, set up the handlebars into the position, that suits the best for driving. The maximum pulled brake lever position should not touch on the handlebar grip. After setting up, tighten the handlebar sleeve (clip-on) nuts 1; tighten the brake lever bolts and the throttle assembly 3. See, Fig.1. By loosening the nut M8 (P/N 920.010.01) on the foot peg bracket, the rider can adjust the foot peg position in a forward or rear direction. The foot rest can be moved to the front or back position. It is recommended to try and check the position of handlebars and foot rest's individually. While tightening the bolts and nuts, do not use an excessive force as to not damage the threads, or distort the tubes and other parts. Verify the smooth and perfect function of the Bowden cables to throttle and both brakes. Fill the cooling system with coolant and vent the system (follow the instructions in chapter MAINTENANCE OF COOLER SYSTEM). Fill the fuel tank with fuel mixture. Failure to use the proper oil mix ratio will result in Engine damage for which you will be responsible.

Fig. 1

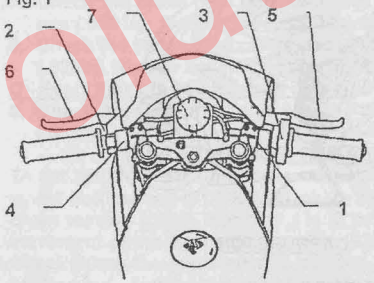

Operating controls:
1. Handlebar bolts
2. Brake lever bolts
3. Throttle Assy. bolts
4. Stop switch
5. Front brake lever
6. Rear brake lever
7. Balance tank for coolant

Range of adjusting handlebars function position

SAFETY

The minibike is unsuitable for public road use. It does not comply with valid Safety Standards. Unsafe and careless use of a minibike can result in serious injuries. The driver can minimize the potential risks by wearing the Safety Equipment. The driver must wear safety helmet, goggles, gloves, elbow pads, kneepads, and firm footwear. The minibike cannot be used on wet, icy or oily surfaces. Avoid uneven surfaces and obstacles. Drive with two hands on the handlebars.

BEFORE STARTING

It is strongly recommended to follow all the instructions about the break-in period to promote engine reliability and long life. Break-in period of the minibike is complete after the consumption of five full fuel tanks. It is important to use mixture of petrol 92 or higher Octane with 2-stroke synthetic oil in the ratio 30:1 and after break-in period a ratio of 50:1. Mix the petrol and oil completely before putting it into the fuel tank. During the break-in period do not run the engine at maximum RPM and do not allow the engine to overheat.

Check the tire inflation – 200 kPa (2 bars) or (28 to 30psi) to be commensurate with the driver's weight. The Tyre pressure should never exceed 2,5 bars, (38psi) in either the front or rear wheel.

IMPORTANT NOTICE: If the coolant level rises in the balance tank, switch off the engine immediately! Check the drive of the coolant pump and sealing of the *cooling system. After these steps, execute the ventilation of the Radiator.* The raised level of coolant is an indicator of a overheated engine, which can result in seizing the piston in the cylinder.

STARTING THE ENGINE

Engine starting should be done only on the stand - Fig. 2. Fill the fuel tank and close it with the filler cap. Open the Gas petcock. Set the petrol supply cock. *Set the choke lever into position "C", Fig. 3. Without turning the accelerating* handle, pull gently twice the starting wire and by next guick pull start the engine. It is not allowed to pull the starting wire up to full winding off. The choke lever will turn back to the position "A" automaticaly by turning the accelerating lever after a short engine run . Let the engine run about 1 min. Leave the minibike on the stand with running engine and if necessary adjust *the revolutions so the rear wheel is not turning.* For adjustment use the adjustment screw No. 3 on the carburetor Fig. 3.

Fig. 2

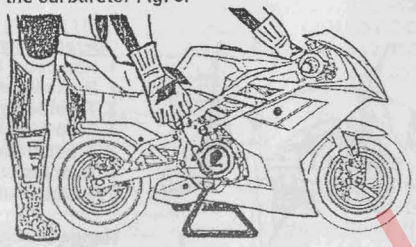

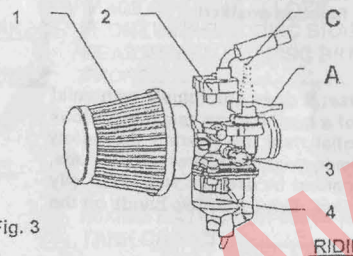

CARBURETOR

1. Air filter
2. Carburetor body
3. *Idle speed adjusting screw*
4. Float chamber

A – Cock position for riding
C – Cock position for cold starting

Fig. 3

RIDING

Remove the minibike from the stand to sit on the seat. When seated, then slowly rotate the throttle grip to start riding. Before braking, rotate the Throttle grip to the off or idle position and lightly depress the rear brake lever with left hand and then the front brake lever with right hand. Beware to not skid the wheels. The minibike engine is switched off by pushing the red button (Engine stop switch) on the handlebars. *It is necessary to check the tightness of bolts* and nuts, especially of the engine, and the brake settings after the first ride and often during the break in period.

PERIODIC MAINTENANCE

Periodic maintenance is the best way to help the machine perform well, give longevity and provide safety and low cost operation. In addition, you will be spared from many worries from self caused problems, resulting from poor maintinence or no maintinence.

A - Before every ride:

1. Check the Cables and efficiency of brakes.
2. Check the lubrication and chain tension settings. The chain free play should be (5 mm) (.200in) After every ride clean the minibike carefully and keep it clean. Do not use aggressive cleaning detergents.
3. After 1-hour of use, wash the air filter in air drying spirits and lubricate it with special oil for air filters.
4. After 1- hour of use, check the state of the clutch pads. Review the clutch adlustment.

B. After every 5 hours of riding:
Check the tightness of all bolts and nuts. Tighten with a properly adjusted torque wrench only! For torque settings see tables on page 17.

5. Wash the air filter in gas and lubricate it with special oil for an air filters to better catch the dust.
6. Clean carefully the carburetor float chamber.
7. Check the brake pads, the thickness of brake lining cannot be less than 1 mm (.039 in). Review the basic brake adjustment.
8. Check the state of the clutch pads - the thickness cannot be less than 1 mm (.039in). Review the clutch adjustment.

C - Every time after 10 hours of riding:

9. Check the state of the clutch pads - the thickness cannot be less than 1 mm (.039in).

CHAIN SETTING AND MAINTENANCE

To set the chain tension, loosen the Nut (920.011.01) of the axel thru the rear *wheel and the nut (914.021.01) of the rear Caliper anchor plate.* The required chain tension (chain free play) is (5 mm) (.200in) and is performed by equal movement of the Axel adjustor plate (920.009.01) on the both sides of the rear wheel. When the adjustment is correct, tighten the Axel nuts and the Caliper holding nut. Tighten the adjustor plate nuts both sides an extra nip, just to set them firmly. It is important to lubricate the chain regularly, to avoid excess *wear and prolong effective lifetime. The lubrication is important after every ride* on a wet surface. It is recommended to lubricate the minibike with special chain spray. If chain replacement is necessary, check both chain Sprockets and if there is a need to change them do it together with the chain.

CENTRIFUGAL CLUTCH PARTS. REPLACEMENT

Remove the chain guard by loosing two bolts M6 (916.020.01), Fig. 5. Loosen the chain and remove it from the sprocket. Next, loosen three bolts holding the aluminum clutch housing. Remove it together with steel clutch basket, and dismantle it. Loosen the bolt from the carrier and remove the clutch from the engine. Loosen and remove the adjustable bolts and springs. Then dismantle the safety rings from pins. When all this is done, replace with new clutch slipper shoes and springs (if required), at this time. During the reassembly process follow these steps: 1. put the plate with the springs on the slipper shoes. 2. Put the plate against the carrier and mount it on the fixed pins. Fit it with the safety rings and install the adjustable bolts.

ADJUSTING THE BRAKES

Small incremental brake adjustment

Free play at the handlebar lever is effected by turning the knurled end on the cable adjustor. This will allow the lever to be set at the nominal to ¼ inch of free lever movement.

Basic brake adjusting:

Screw in the knurled cable adjustor at the brake lever so the cable is in it's most slack starting position.. At the caliper, loosen the nut, No. 3 and tighten the adjustable bolt No. 4, so the wheel cannot turn. Back off bolt No. 4 about ¼ to ½ of a turn and fix it with lock nut No. 3. Do not use the cable retainer No. 5 for adjusting the brakes!

Fig. 4

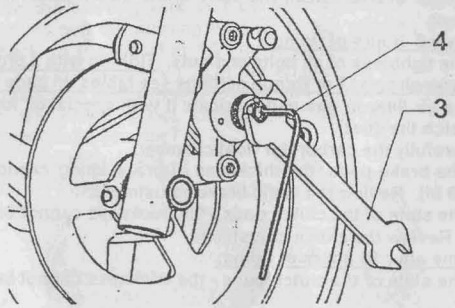

FRONT BRAKE PADS REPLACEMENT - FIG. 7

First screw in the knurled cable adjustor at the right brake lever (122.002.00) on the handlebars to the starting position (slackened cabled). Loosen the nut (920.001.01) and turn the adjustable bolt (512.015.00) in the way that by pressing the front brake lever, the lever (312.017.00) will be over the bolt head M5 (312.018.00), which protects brake pads and spring of pads (312.020.00). Unbolt this bolt and replace the old brake pads with new ones. When mounting the brake pads place the brake spring against both pads, so they are pressed into the front direction. While replacing the brake pads do not loosen bolts M5 (914.001.01) on the driving pins and do not loosen the cable retainer!

REAR BRAKE PADS REPLACEMENT - FIG. 7

First screw in the knurled cable adjustor at the left brake lever (122.001.00) on the handlebars to the starting position (slackended cable). Loosen the nut (920.001.01) and turn the adjustable bolt (512.015.00) all the way out. Unbolt the nut M10 (920.001.01) of the back axel, push it out and dismantle the rear wheel from the Swingarm. Push out the brake from driving pins, that will loosen the brake pads and replace the old ones at this time. While replacing the brake pads do not loosen bolts M5 (914.001.01) on the driving pins and do not loosen the cable retainer! During the mounting follow all these instructions in the reverse direction and then perform basic adjusting of the brakes.

REMOVE AND REPLACE THE FRONT WHEEL - FIG. 5

Before dismantling the front wheel it is necessary to remove the front brake pads from the front brake, so it is possible to move the brake caliper from the wheel and be able to draw out the wheel and tire. Remove the front axel nut. M10 (920.011.01) Draw out the axel from the fork and wheel. Remove the wheel by an easy pull downwards from the forks. CAUTION! Two 3mm spacers will fall out when the wheel is being removed! Insert one spacer between the brake rotor and the brake mounting bracket, and the other spacer between the wheel and the right fork(P/N 315.011.00) when re-assembling.Return the brake pads with the spring and tighten up the axel nut. Perform the basic brake adjusting. Double check your work. This is important!

REMOVE AND REPLACE THE REAR WHEEL - FIG. 5

Loosen and remove nut M10 on the rear axle. Safely (hold) keep the rear wheel from falling out while pulling out the axel. Caution, note the location of both spacer tubes and one spacer washer (between caliper mount plate and rotor) while removing wheel. When refitting the wheel, make sure to slide the brake rotor into the caliper between the pads. Hold the wheel in place and fit the wheel spacers in proper order. . Insert one 3mm spacer between the brake rotor and brake mounting bracket and than insert the 9.5mm spacer between the brake and the rear swing arm.Adjust chain tension and tighten axel nut. Tighten the caliper holder plate nut and set and tighten both chain adjustor plate M6 nuts. At this time check the brake operation. Recheck all your work. This is important!

REPLACEMENT OF PINION - FIG. 9

First dismantle the front chain guard and chain guard.Loosen the nut of rear wheel axle and the nut of chain tightener ,remove chain. Insert carefully a larger screw drive or steel rod into the hole of clutch drum, Fig. 9, to avoid a turning over the clutch drum at releasing the pinion. Using the pinion wrench P/ N 319.050.00, release the new pinion to be carried out by reverse way.

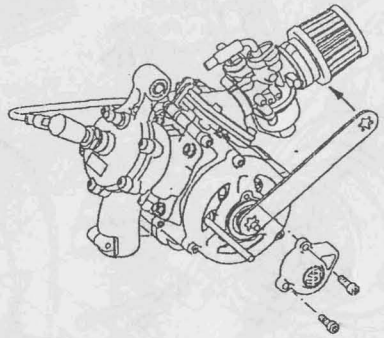

FIG. 9

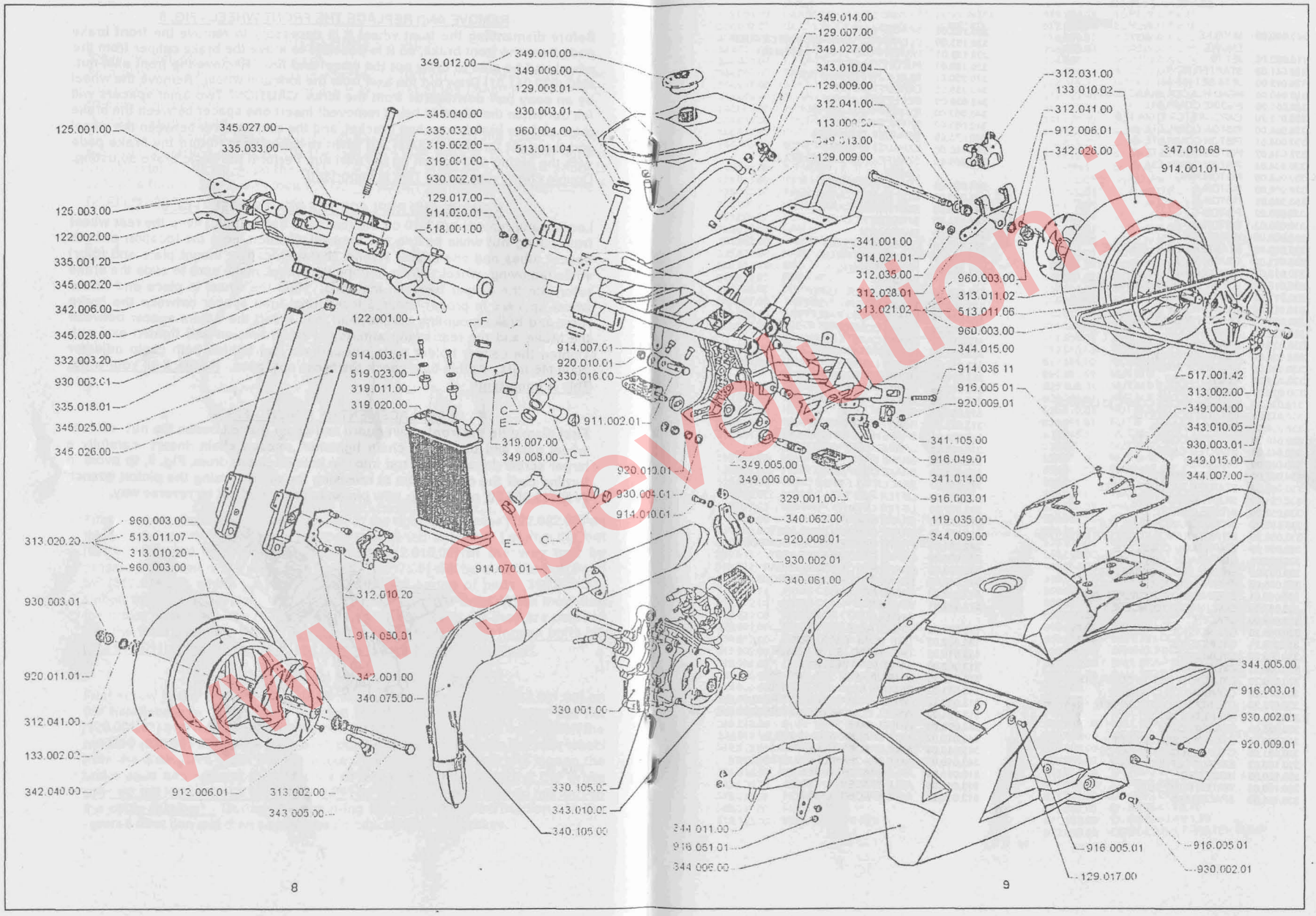

MINIBIKE

340.000.00	MINIBIKE
	ENGINE
110.080.76	JET 76
120.041.00	STARTER ROPE
120.089.00	JETS SET (68-88)
310.040.00	HEAD HOLDER SILENT BLOCK
330.001.00	ENGINE COMPLETE
330.002.20	CARBURETOR PHVA 17,5
330.004.00	PISTON COMPLETE -A
330.004.01	PISTON COMPLETE -B
330.004.02	PISTON COMPLETE -C
330.004.03	PISTON COMPLETE -D
330.005.00	PISTON RING
330.006.00	PISTON-A
330.006.01	PISTON-B
330.006.02	PISTON-C
330.006.03	PISTON-D
330.008.00	WRIST PIN
330.010.00	STARTER LEVER - CHOCKE
330.011.00	CRANK SHAFT
330.015.00	CLUTCH SUBBASE
330.016.00	CYLINDER HEAD HOLDER SET
330.017.00	CLUTCH SHOE
330.018.00	CLUTCH CASE
330.021.00	CLUTCH SPRING 2.5x6.5
330.022.00	SPRING PLATE
330.023.00	STARTER LEVER SPRING
330.024.00	CLUTCH BASKET
330.025.00	DISTANCE WASHER
330.028.01	CLUTCH CASE
330.029.00	PINION 6 TEETH
330.030.00	CLUTCH SHOES COMPL. (3 LEVERS)
330.032.00	CLUTCH COMPLETE
330.039.00	SPACER - PISTON
330.040.00	STARTER COMPLETE
330.045.00	STARTER CASE
330.046.00	GROMMET
330.047.00	STARTER SPRING
330.049.00	STARTER RATCHET WHEEL
330.051.00	SILENT BLOCK TUBE
330.052.00	INTAKE GASKET
330.053.30	INTAKE BRANCH PHVA 17,5
330.056.30	INTAKE BRANCH COMPLETE PHVA 17,5
330.058.00	DIAPHRAGM COMPLETE
330.059.01	DIAPHRAGM - BLACK (PAIR)
330.063.00	ENGINE BLOCK GASKET SET
330.065.00	ENGINE PROPER
330.066.01	ENGINE PROPER GASKET SET
330.067.00	COIL (MAGNETO) HOLDER
330.068.00	SPACER
330.069.20	CYLINDER-A
330.069.21	CYLINDER-B
330.069.22	CYLINDER-C
330.069.23	CYLINDER-D
330.070.20	CYLINDER+ PISTON COMPLETE
330.072.20	COMBUSTION CHAMBER
330.073.20	CYLINDER HEAD COMPLETE - WATER
330.083.01	AIR FILTER MI - 38
330.085.00	BEARING CASE
330.090.00	CYLINDER SEALING SET
330.091.00	CYLINDER GASKET - 4 PCS
330.105.02	EXHAUST SPRINGS-PAIR
330.120.00	HOSE END
330.150.00	WATER PUMP TUBE
330.151.00	SPACER L=5
330.152.00	SPACER L=4.6
330.153.00	CLEARANCE WASHER -WATER PUMP
330.155.01	WATER PUMP SHAFT ASSEMBLY
330.159.01	PULLEY - LARGE
340.050.00	SILENCER TERMINATION
340.055.00	EXHAUST BRACE
340.056.00	SILENCER CASING
340.062.00	RUBBER WASHER 15
340.065.00	SILENCER MASS
340.075.00	EXHAUST COMPLETE
340.105.00	EXHAUST SPRINGS - 2PCS
510.005.00	STARTER ROPE HAND HOLDER
	FRAME
341.001.00	FRAME VARNISHED
341.005.00	SIDE FRAME CARRIER- L
341.006.00	SIDE FRAME CARRIER - R
341.014.00	SPROCKET COVER
341.100.00	SWINGARM
341.105.00	CHAIN TENSIONER
341.200.00	UNDERSEAT FRAME
341.300.00	FRONT TRELLIS
	BRAKES
122.001.00	BRAKE LEVER - LEFT
122.002.00	BRAKE LEVER - RIGHT
152.005.20	BRAKE PADS - PAIR
312.010.20	BRAKE COMPLETE
312.015.01	BRAKE CASE
312.016.00	CABLE RETAINER
312.017.00	LIFTER LEVER
312.018.00	MODIFIED SCREW
312.019.00	SPRING -RIGHT
312.020.00	BRAKE PADS SPRING
312.021.00	SPACER L=12
312.025.00	REAR BRAKE PADS -PAIR
312.028.01	BRAKE HOLDER COMPLETE
312.029.00	SPRING -LEFT
312.030.00	BRAKE CASE
312.031.00	BRAKE COMPLETE
312.035.00	SPACER 6.1 x 14 x 3
312.036.00	LIFTER - LEFT
312.037.00	LIFTER - RIGHT
312.038.00	BRAKE SHAFT
332.003.20	BRAKE CABLE/SLEEVE ASSY
342.001.00	FRONT BRAKE HOLDER COMPLETE
342.006.00	BRAKE CABLE/SLEEVE ASSY
342.026.00	BRAKE ROTOR (DISK) – REAR
342.040.00	BRAKE ROTOR (DISK) – FRONT
512.016.50	CABLE RETAINER
512.019.01	WASHER
	WHEELS
113.009.00	WHEEL AXLE
133.002.02	TIRE 90/65 -6.5" B - SLICK
133.010.02	TIRE 110/50 - 6,5" B - SLICK
313.002.00	VALVE 90°- TUBELESS
313.010.20	RIM/HUB ASSY 2,1"- 6,5"- 99
313.011.02	RIM/HUB ASSY 2,3"- 6,5"-130
313.020.20	WHEEL COMPLETE W/O TIRE 2,1"- 6,5"- 99
313.021.02	WHEEL COMPLETE W/O TIRE 2,3"- 6,5" -130
343.005.00	WHEEL AXLE
343.010.02	AXLE SPACER 8,5 x 18 x 23,3
343.010.04	AXLE SPACER 10,5 x 18 x 9,5
343.010.05	AXLE SPACER 10,5 x 18 x 13,5
513.011.04	AXLE SPACER L=84.5
513.011.06	AXLE SPACER L=117.3
513.011.07	AXLE SPACER L=85.3

	BODY
344.001.00	GLASS BODY KIT COMPLETE, UNPAINTED
344.002.00	GLASS BODY KIT COMPLETE, PAINTED
344.003.00	FAIRING, UNPAINTED
344.004.00	SEAT-TAIL ASSY UNPAINTED
344.005.00	REAR FENDER, UNPAINTED
344.006.00	FAIRING, PAINTED
344.007.00	SEAT-TAIL ASSY PAINTED
344.008.00	REAR FENDER, PAINTED
344.009.00	WINDSHIELD + RIVETS
344.010.00	FRONT FENDER, UNPAINTED
344.011.00	FRONT FENDER, PAINTED
344.015.00	CHAIN GUARD
	STEERING
115.014.00	BOWDEN DUST GUARD
125.001.00	HAND-GRIPS (PAIR)
125.003.00	THROTTLE TWIST GRIP
335.001.20	HANDLEBAR COMPLETE
335.008.21	NUT
335.018.01	CAP
335.032.00	HANDLEBAR SLEEVE (CLIP - ON) LEFT
335.033.00	HANDLEBAR SLEEVE (CLIP - ON) RIGHT
345.002.20	GAS CABLE/SLEEVE ASSY
345.025.00	FORK RIGHT
345.026.00	FORK LEFT
345.027.00	TRIPPLE TREE – UPPER, COMPLETE
345.028.00	TRIPPLE TREE – LOWER, COMPLETE
345.040.00	STEERING BOLT
	TRANSMISSION
347.010.68	SPROCKET 68 TEETH
517.001.42	CHAIN 142 LINKS
	ELECTRIC COMPONENTS
128.003.04	SPARK PLUG NGK B 9 ES
338.001.00	IGNITION COMPLETE
338.002.00	ROTOR COMPLETE
338.005.00	SPARK PLUG CAP
518.001.00	KILL SWITCH
	OTHER PARTS
119.035.00	WASHER 6.4 x 18 x 1
129.007.00	HOSE CLAMP 11/7
129.008.00	HOSE CLAMP 12/8
129.009.00	HOSE CLAMP 10/7
129.017.00	WASHER 6.4 x 16 x 1
319.001.00	COOLANT RESERVOIR WITH CAP
319.002.00	COOLANT RESERVOIR CAP
319.007.00	COOLANT RESERVOIR HOSE
319.011.00	RADIATOR SILENT BLOCK
319.012.02	HOSE CLAMP 16/8 -C
319.012.03	HOSE CLAMP 17/8 -D
319.012.04	HOSE CLAMP 21/8 - E
319.012.05	HOSE CLAMP 24/8 - F
319.020.00	RADIATOR COMPLETE
329.001.00	FOOT PEGS PLASTIC -PAIR
339.012.00	HOSE CLAMP 28/8
349.002.00	DECALS SET ORIGAMI B1
349.004.00	SEAT RUBBER
349.005.00	FOOT REST WASHER
349.006.00	FOOT REST
349.008.00	HOSE WITH AIR BLEED
349.009.00	FUEL TANK
349.010.00	FUEL TANK CAP
349.012.00	FUEL TANK WITH CAP
349.013.00	CARBURETOR FUEL HOSE
349.014.00	FUEL HOSE
349.015.00	WHEEL AXLE NUT
349.020.00	STAND
349.025.00	HOSES SET + CLAMPS
349.027.00	FUEL COCK
519.023.00	WASHER 5.4 x 16 x 1
	OTHER HARDWARE
911.002.01	SCREW M 8 x 45
912.006.02	SCREW M 5 x 16
914.001.01	SCREW M 5 x 16
914.003.01	SCREW M 5 x 20
914.007.01	SCREW M 6 x 16
914.008.01	SCREW M 6 x 20
914.010.01	SCREW M 6 x 25
914.013.01	SCREW M 5 x 35
914.018.01	SCREW M 5 x 10
914.020.01	SCREW M 6 x 10
914.021.01	SCREW M 6 x 12
914.026.01	SCREW M 5 x 12
914.035.01	SCREW M 6 x 35
914.036.11	SCREW M 6 x 45
914.043.01	SCREW M 8 x 25
914.070.01	SCREW M 8 x 125
914.075.01	SCREW M 8 x 140
914.080.01	SCREW M 6 x 14
914.083.01	SCREW M 8 x 20
914.510.01	SCREW M 6 x 30 FLAT HEAD
916.003.01	SCREW M 6 x 10
916.005.01	SCREW M 6 x 16
916.007.02	SCREW M 5 x 12 ALLEN
916.014.01	SCREW M 6 x 20
916.030.01	SCREW M 5 x 12
916.031.01	SCREW M 6 x 8
916.049.01	SCREW M 5 x 6
916.051.01	SCREW M 5 x 10
916.060.02	SCREW M 6 x 30 ALLEN
916.065.02	SCREW M 5 x 25 ALLEN
920.001.01	NUT M 5
920.008.01	NUT M 5 SELF-LOCKING
920.009.01	NUT M 6 SELF-LOCKING
920.010.01	NUT M 8 SELF-LOCKING
920.011.01	NUT M 10 SELF-LOCKING
920.015.01	NUT M 6 WITH COLLAR
920.020.01	NUT M 8 x 1
920.021.01	NUT M 10 x 1
930.001.01	WASHER 5,4
930.002.01	WASHER 6,4
930.003.01	WASHER 10,5
930.004.01	WASHER 8,4
930.009.00	SPRING WASHER 6,4
930.014.00	SPRING WASHER 5,4
930.020.01	WASHER 6,1
940.006.00	CYLINDER 6x6
940.008.00	RIVET BULBEX 4,2 x 18.8 WITH CAP
950.003.00	WOODRUFF KEY 3e7 x 3,8
950.008.00	SAFETY LOCK 35
950.009.00	SAFETY LOCK 17
950.018.00	SAFETY LOCK 10 x 1
950.021.00	SAFETY LOCK 22
950.025.00	SAFETY LOCK 6
950.050.00	SPRING PIN 10 x 50
960.003.00	BALL BEARING 6000 - 2 ZR
960.004.00	BALL BEARING 6200 - 2 ZR
960.009.01	BALL BEARING 6003 - 2 ZR
960.012.00	BALL BEARING 626
960.015.01	BALL BEARING 6203 TN 9 C3
960.018.00	BALL BEARING 627 ZR
960.108.00	NEEDLE BEARING 10 x 14 x 12.7
970.005.00	SEAL 17 x 25 x 4
970.006.00	SEAL 10 x 18 x 4
971.050.00	O - RING 5 x 1,8
971.070.00	O - RING 22 x 2
971.071.00	O - RING 27 x 3
971.080.00	O - RING 41 x 1,78
971.155.00	O - RING 66,4 x 1,78
972.050.00	COGGED BELT -WATER PUMP

ENGINE - BLATA 330.001.00

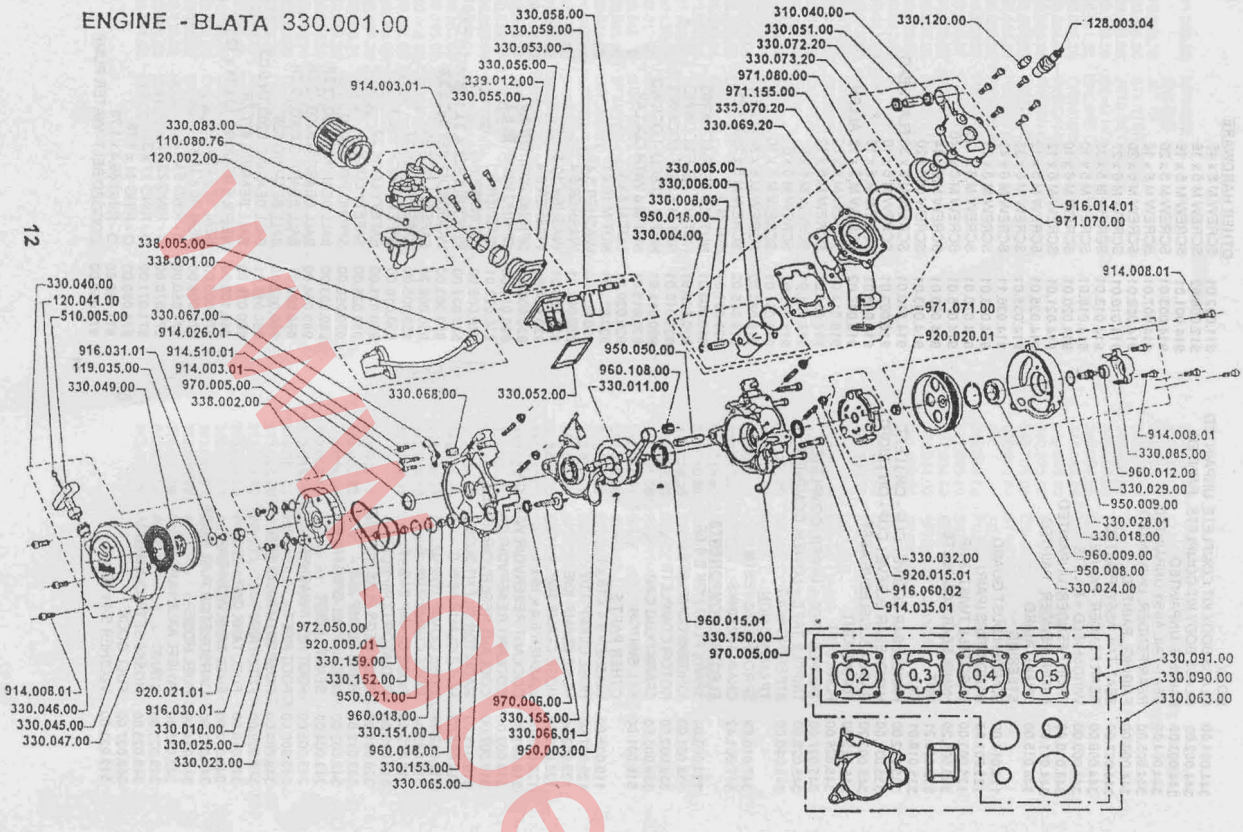

CLUTCH COMPLETE - 330.032.00

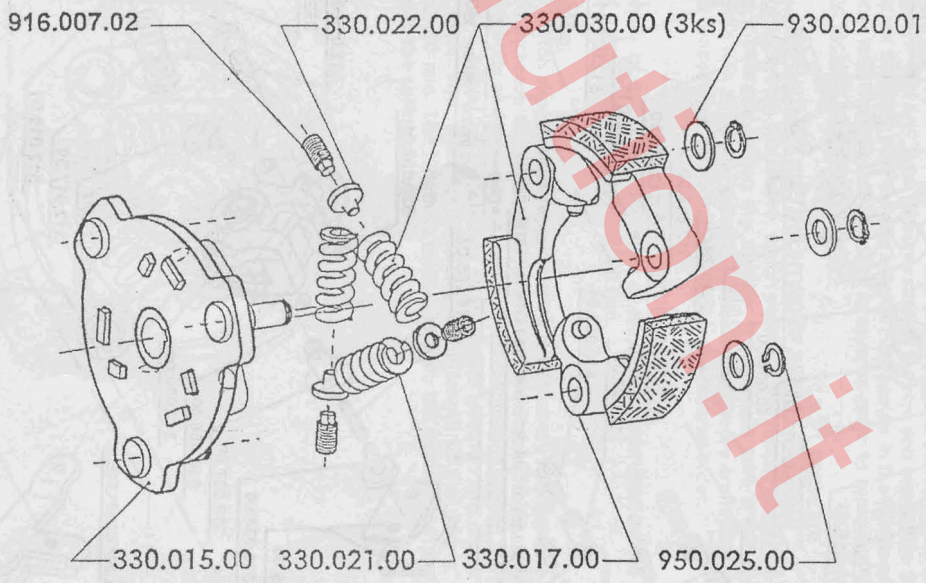

FIG. 6

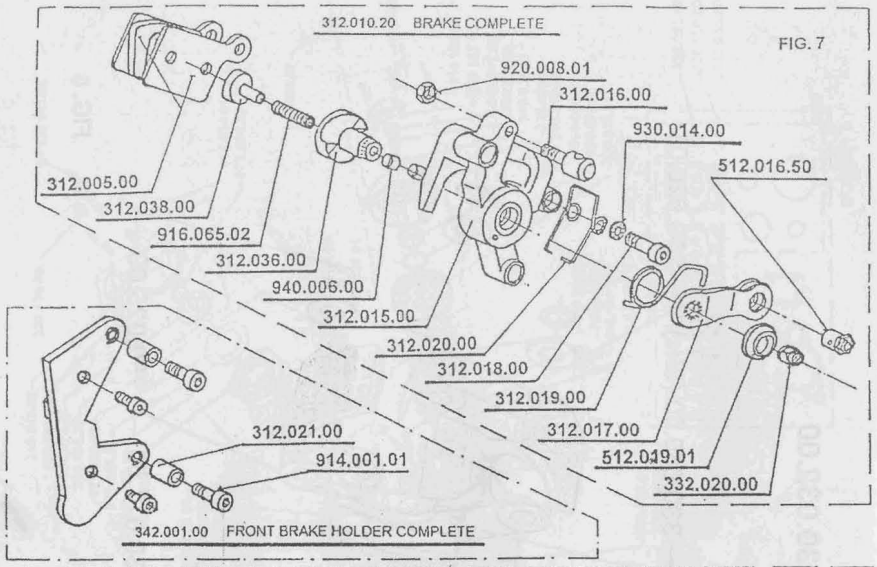

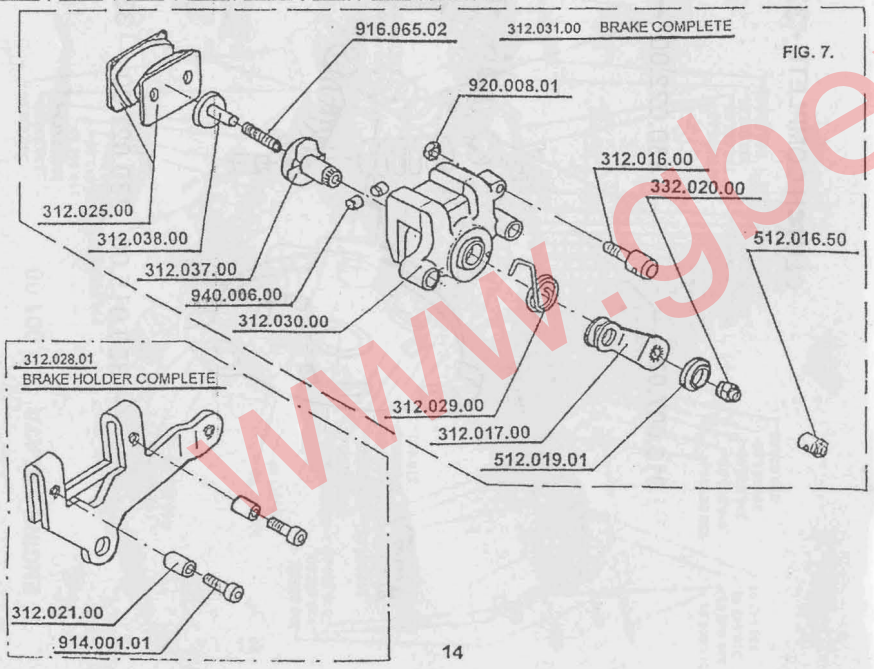

REPLACEMENT OF TIRE – FIG. 5

Remove the wheel from the minibike. For the front wheel unbolt the brake disk and for the rear wheel, the brake disk and sprocket. Deflate the tire, by removing the valve stem. Place the wheel on a hard surface and press the tire bead from the wheel rim in to the middle relief at centre of rim. Tire is ready to be removed from the rim at this time and is done in the conventional manner. After fitting new Tire and Tube (if necessary) to the rim, you can inflate 28 to 30 psi. Take care to check that the tire bead is fully seated in the rim bead edge. You can now refit the wheel to the bike in reverse order to removing it. Use Caution and recheck your work always.

DISMANTLING AND MOUNTING OF AIR FILTER - FIG. 3

Remove the bolt from the sleeve, which connects the rubber holder of the air filter to the carburetor. When the air filter is loosened, take it out and very carefully wash it in air drying solvent, lubricate it when dry and spray with air filter oil and reassemble, following the steps in the reverse order.

CLUTCH ADJUSTMENT – FIG. 8

After first hour of use, check the state of the clutch pads. Review the clutch adjustment – engaged with 8 000 – 8 500 rpm.

Basic adjusting:

After every clutch slipper shoe replacement it is necessary to adjust the clutch springs. To increase the revolutions, and feel the clutch working, tighten up the adjusting bolts and to engage shoes at lower revolutions,loosen the bolt. It is important to adjust all the springs to the same level, so the clutch lining wearing is even. The index for adjusting is the length of the spring, which should be 21,00 mm. The length is measured from the bearing surface of the clutch shoe to the spring plate.

FIG. 8

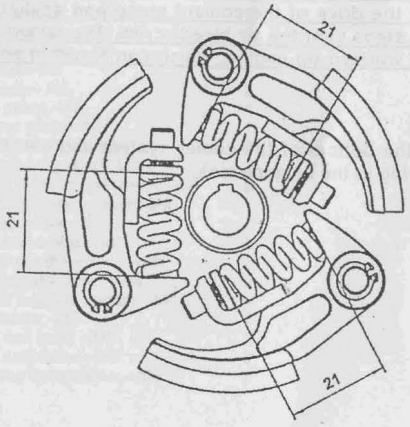

MAINTENANCE OF COOLER SYSTEM

1. Liquid filling:

Place the minibike on the stand. Dismantle the seat and very carefully check all the joints on the hose. For older minibikes do not forget to check for holes and other damages to the hose. To fill the cooler system, 0.5 liters of the coolant is needed. In case the minibike will be used during the wintertime, do not forget to use the anti-freeze coolant. Pour the coolant into the balance tank, which is placed between the handlebars, until it is filled to ¾ of capacity. Unbolt vent bolt M5 (P/N 914.006.01), which is inserted in the hose (P/N 349.) between the bottom part of the radiator and the engine block. Tighten the bolt only after all air has been bled and only coolant is coming out of the vent plug hole. Always hold the hose in order not to pull out the air escape valve. It is important to have more than ½ capacity of the coolant in the balance tank. The same procedure applies to the venting hose (P/N 349.) between the cylinder head and the radiator. Once more vent the system while loosening the air bleed screws until all air is expelled.

Close the tank and pull the start T'handle two or three times. This will circulate the coolent in the system. Once more vent the system while loosening the air bleed screw.

Only now it is possible to start the minibike, and leave it to run on the stand for one minute. Turn of the motor, and vent it again. Then the minibike is ready for use.

2. Check up of cooler system:

Before every ride check the amount of coolant in the balance tank! After every 10 hours of riding, remove the pull starter cover and check the Gilmer type belt, which runs the coolant pump.

Important notice: If the coolant level rises in the balance tank switch of the engine immediately! Check the drive of the coolant pump and sealing of the cooler system. After these steps vent the air bleed screw. The raised level of coolant is an indicator of a warmed up engine, which can result in seizing of the piston in the cylinder.

3. Draining the Coolant:

Dismantle the hose on the bottom of the cooler system and eliminate the liquid. Unbolt the drain plug in the balance tank.

TORQUE SETTINGS

(1 FT-LB = 1.3558 Nm)

PART NAME	QTY	TORQUE SETTING (FT-LB)	SECURED BY
ENGINE			
Cylinder head, liquid cooled – M6	6	3.7	
Cylinder – nuts M6	4	5.5	
Intake manifold – M5	4	2.5	
Starter cover – M6	3	4.0	
Ratchet wheel –bolt M6	1	3.7	LOCTITE
Magneto (rotor) – nut M10	1	11.0	
Starter prowls – bolts M5	2	1.8	LOCTITE
Ignition coil – bolts	2	3.3	
Ignition coil holder – bolt M6	1	4.4	
Crankcase halves – M6	5	4.8	
Clutch base – nut M8	1	8.9	LOCTITE
Clutch case – bolts M6	3	4.0	
Pinion bearing case – bolts M6	2	4.0	
Water pump shaft – nut M6	1	3.0	SELF-LOCKING
Reeds - bolts M3	4	0.6	LOCTITE
Float chamber – bolts M4	2	0.7	
Slider cover (carburetor) – bolts M4	2	0.7	
Fuel filter cap – bolt M5	1	1.8	
Pinion - M8	1	10.3	LOCTITE
Impeller (on water pump shaft) – M5	1	2.6	LOCTITE
FRAME			
Front wheel axle - nut M10	1	7.0	SELF-LOCKING
Front brake rotor – M5	3	3.0	
Front brake bracket – M6	2	4.0	LOCTITE
Brake mount –M5	2	3.3	LOCTITE
Steering shaft – M10	1	6.0	SELF-LOCKING
Handlebar clip-on –M6+M5	2+2	4.0	
Fork brackets – M5	4	3.7	
Steering stem – M6	2	4.4	
Engine bracket, top –M6	2	4.4	
Engine bracket, head – M8	1	6.3	SELF-LOCKING
Engine bracket, bottom – M8	1	8.1	SELF-LOCKING
Rear wheel axle – nut M10	1	8.1	SELF-LOCKING
Rear brake rotor – M5	3	3.0	
Sprocket – M5	3	3.3	
Foot rests – M8	2	6.3	SELF-LOCKING
Chain guard –M6	1	3.0	
Sprocket guard – M5	1	3.0	
Rear brake holder –M5	2	3.3	LOCTITE
Expansion chamber – M6	2	2.2	SELF-LOCKING
Fairing, seat and rear fender – M6	9	3.0	
Rear caliper anchor plate –M6	1	4.8	SPRING WASHER
Handlebar clips – M6	2	2.6	
Brake levers clips – M5	2	1.1	
Throttle clip (handlebar) – M5	2	2.2	
Throttle plastic cover – M4	2	0.7	
Coolant reservoir bracket – M6	1	3.0	
Front fender –M5	4	1.1	
Swing arm (rear) – M8	2	8.1	SELF-LOCKING
Under seat frame – M6	2	4.4	SELF-LOCKING
Side alloy frame carrier – M8	4	8.1	